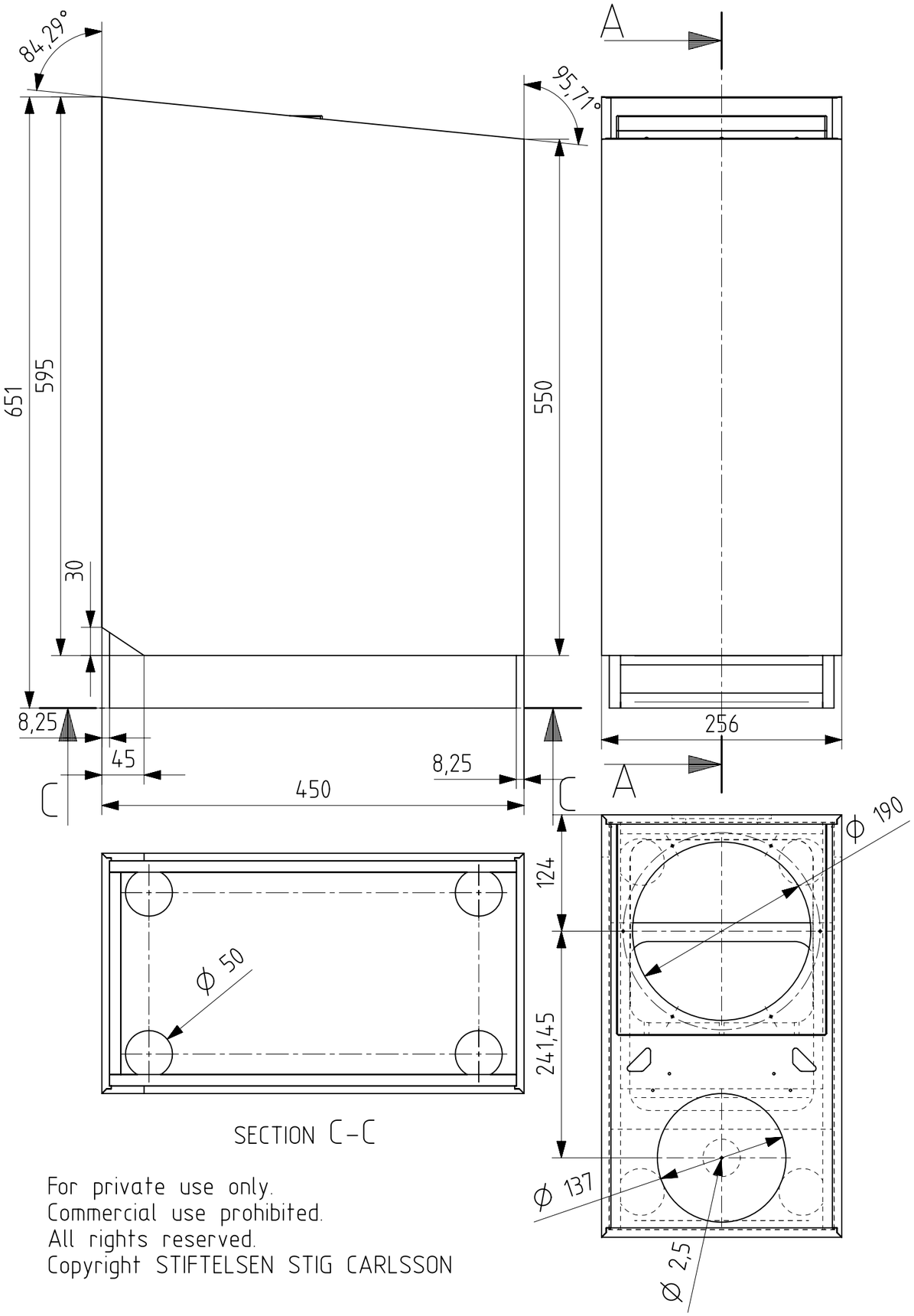

SECTION C-C

For private use only.
Commercial use prohibited.
All rights reserved.
Copyright STIFTELSEN STIG CARLSSON

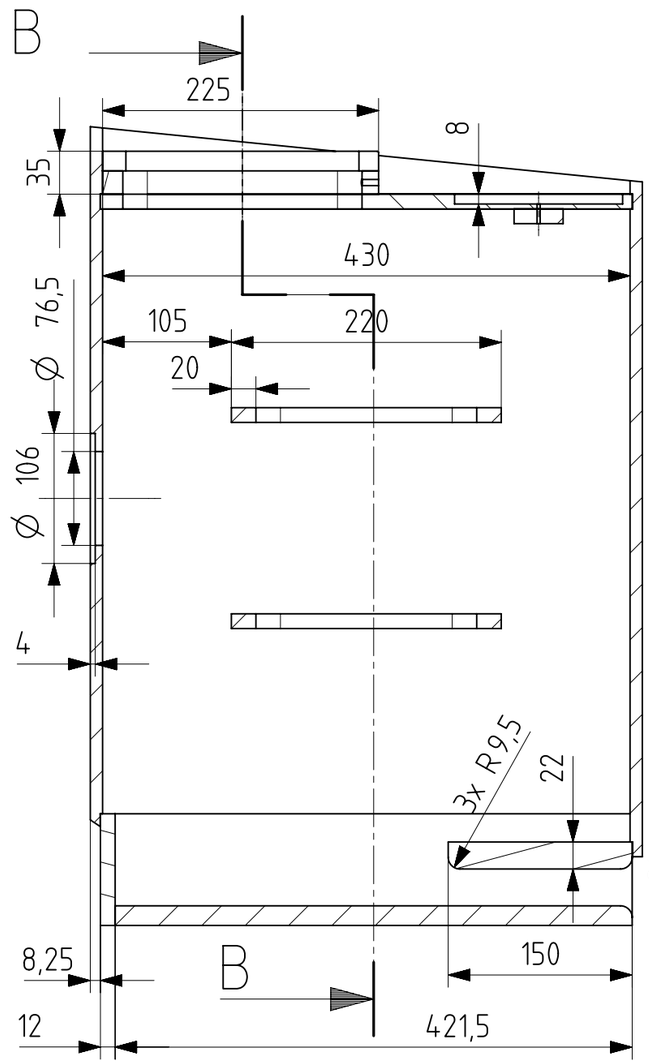

SECTION A-A

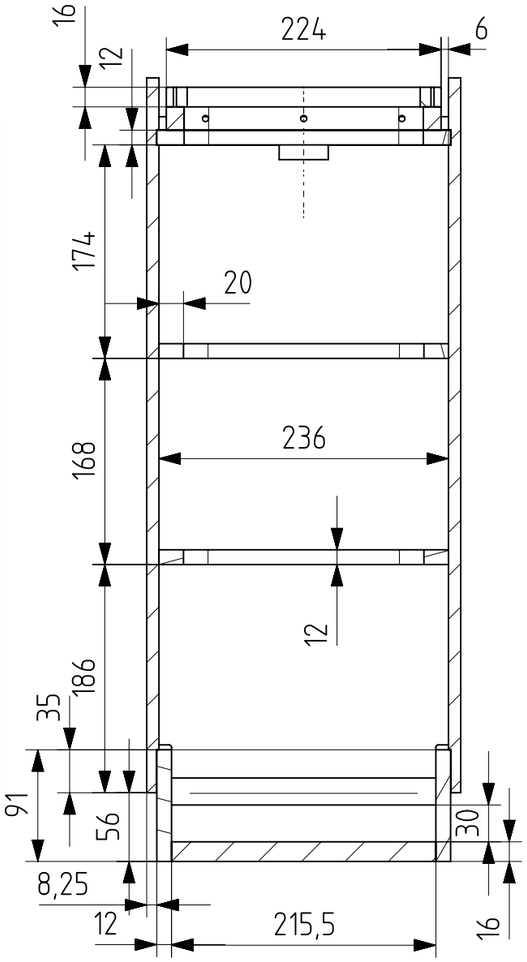

SECTION B-B

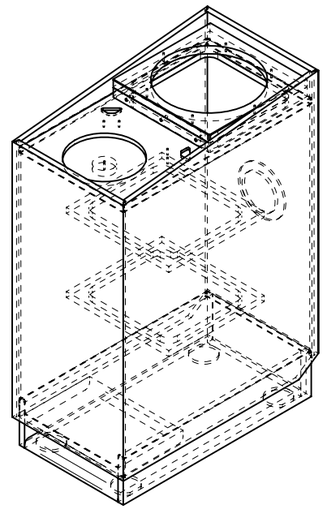

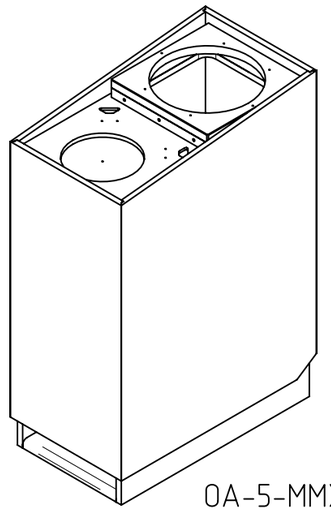

OA-5-MMX BOX 091216
100318